barkman™
creating concrete solutions

Barkman Outdoor Kitchen Kits

Pizza Oven Instruction Manual

IMPORTANT: READ PRIOR TO INSTALLATION

It is the responsibility of the consumer to read and follow the proceeding information.

WARNING:

1. FAILURE TO FOLLOW THESE INSTRUCTIONS COULD RESULT IN FIRE OR EXPLOSION, WHICH COULD CAUSE PROPERTY DAMAGE, PERSONAL INJURY OR DEATH.

2. IMPROPER INSTALLATION OR MAINTENANCE OF THIS PRODUCT MAY RESULT IN DAMAGE TO PROPERTY, INJURY OR DEATH.

3. Read the installation, operation and maintenance instructions thoroughly before installing or servicing this equipment.

Barkman Concrete Ltd. is not liable for any property damage or bodily injury caused by failure to follow the installation instructions, improper use of the product or any negligence or carelessness of the consumer.

INSTALLATION AND USE:

1. Improper installation, adjustment, alteration, service or maintenance can cause injury, or property damage. Read the installation instructions thoroughly before installing the pizza oven.

2. DO NOT TOUCH AREAS IF FIRE IS BURNING, SEVERE BURNING MAY RESULT. CLOTHING IGNITION MAY RESULT.

3. Carefully supervise children near the pizza oven.

4. Keep clothing, furniture, draperies and other combustibles away from the pizza oven.

5. Pizza oven is for outdoor use only.

6. DO NOT OBSTRUCT THE OPENING OF THE PIZZA OVEN, OR OTHERWISE OBSTRUCT THE FLOW OF AIR.

7. OVEN RELATED FIRE CAN OCCUR WHEN THERE IS A FAILURE TO MAINTAIN THE REQUIRED CLEARANCES (AIR SPACES) TO COMBUSTIBLE MATERIALS.

8. Certain steps in the installation process will require more than one person.

9. Curing is crucial to the operation of your pizza oven. Ensure to follow the direction on page 14 of the instruction guide.

10. Plan to install the pizza oven a week before intended use to allow enough time for the curing process.

11. The pizza oven is NOT for commercial use.

12. Never leave the pizza oven unattended.

DANGERS OF FIRE:

1. If the information in these instructions is not followed exactly, a fire or explosion may result in property damage, injury or death.

2. Beware of flying sparks from mouth of oven. Make sure that no combustible materials are within range of pizza oven at any time.

3. Beware of extremely high temperatures in the oven when in use and for hours after use. Use long oven gloves and mitts to handle cooking tools. DO NOT PUT UNPROTECTED HANDS OR ARMS INSIDE WHILE PIZZA OVEN IS LIT.

4. DO NOT USE CHARCOAL, PRESSURE TREATED LUMBER, CHIPPED WOOD PRODUCTS, SAPPY WOOD (SUCH AS PINE), LAMINATED WOOD, OR ANY MATERIAL OTHER THAN DRY MEDIUM OR HARD NATURAL FIREWOOD.

5. DO NOT USE LIQUID FUEL (firelighter fluid, gasoline, kerosene or similar liquids) TO START OR MAINTAIN A FIRE.

FOOD HANDLING:

1. DO NOT heat unopened food containers in the pizza oven.

2. DO NOT use water to clean, dampen or extinguish fire in a hot pizza oven.

3. Never use any cleaner (detergent, chemicals, soaps) on the pizza oven. Refer to page 15 for care and maintenance.

4. This pizza oven is designed for mainly cooking freshly made pizza and/or bread products. All other food products must not come into contact with oven surface but should be contained within appropriate cookware.

PROXIMITY TO BUILDINGS AND OTHER COMBUSTIBLE MATERIALS:

1. The consumer is responsible for reviewing the local regulations pertaining to the installation and use of this product. Please consult your local building code or zoning bylaws for the exact regulations in your community.

2. The pizza oven should be used in accordance with the by-laws, regulations and laws of your jurisdiction. Please confirm that use of this product is in compliance with the by-laws, regulations and laws of your jurisdiction before using.

This manual must be kept by the customer as long as they own their pizza oven kit.

FIRE WARNING:
DO NOT USE LANDSCAPE GLUE TO SEAL THE OVEN DOME, CHIMNEY AND EXTENSION PIPE AS THIS IS A FIRE HAZARD. ONLY USE **SILICONE** FOR THIS PURPOSE.

This kit measures 60”W x 64”D x 93”H.

Materials Included:
4”x 4” quarry stone - 3 pieces
4”x 8” quarry stone - 119 pieces
8”x 8” quarry stone - 16 pieces
8”x 12” quarry stone - 141 pieces
6” x 4 7/8” quarry stone - 2 pieces
8” x 2 5/8” quarry stone - 2 pieces
8” x 1 1/2” quarry stone - 3 pieces
8” x 3 3/4” quarry stone - 2 pieces
12” x 3 1/2” quarry stone - 4 pieces
small and large arches
countertop pieces
chiseled and smooth divider plates
floor
dome
chimney and extension pipe
roof
shims
pizza peel
2 tubes of landscape glue
2 tube of high temperature silicone
gloves
instruction guide
installation video
landscape design plan

*This kit contains extra pieces. You will have pieces left over once you have completed the install.

Note:
If installing your pizza oven on an unstructured base, please ensure to follow these steps:

- Excavate area approx. 9” below grade
- Excavate approx. 6” larger than your actual kit dimensions to ensure a stable base
- Fill with ¾” down limestone and compact firmly
- Level out ½” of sand and install kit as per the instruction guide

If you are installing on a solid base such as an existing patio and/or base prep is not necessary, then you can proceed to the first step.
These instructions may not refer to all base conditions. As this kit is incredibly heavy, base prep will greatly depend on existing ground conditions and may require alternate techniques.

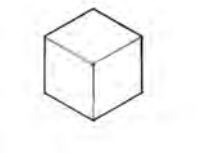

4 x 4 quarry stone

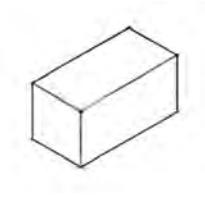

4 x 8 quarry stone

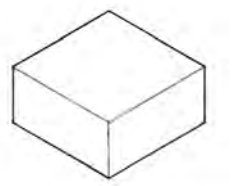

8 x 8 quarry stone

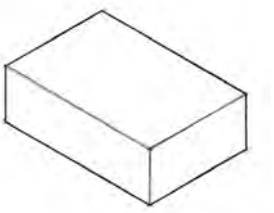

8 x 12 quarry stone

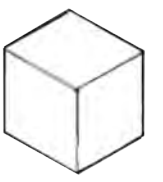

6 x 4 7/8 quarry stone

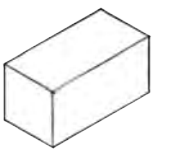

8 x 2 5/8 quarry stone

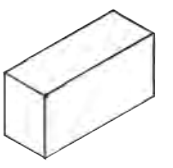

8 x 1 1/2 quarry stone

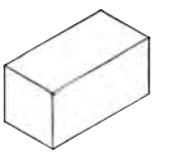

8 x3 3/4 quarry stone

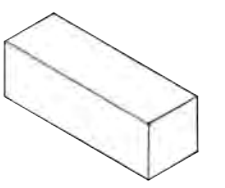

12 x 3 1/2 quarry stone

barkman™

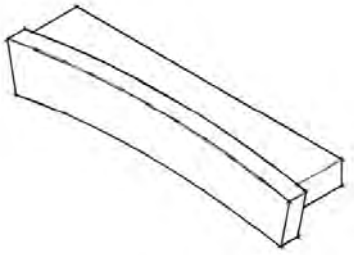

small arch

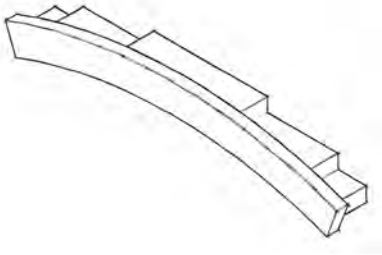

large arch

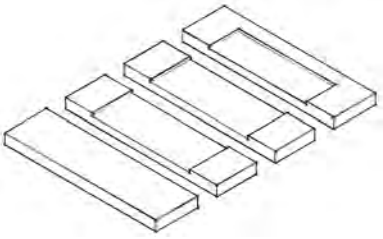

countertop pieces

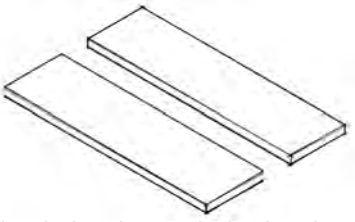

chiseled and smooth divider plates

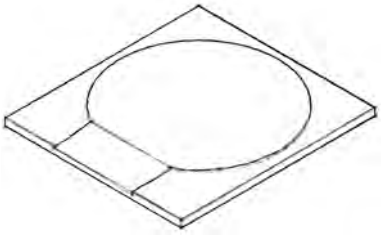

floor

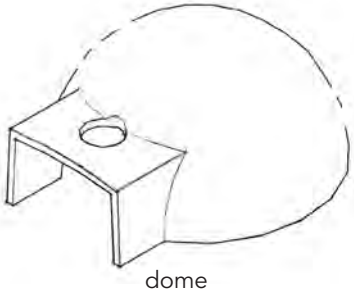

dome

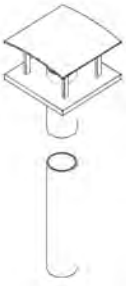

chimney and extension pipe

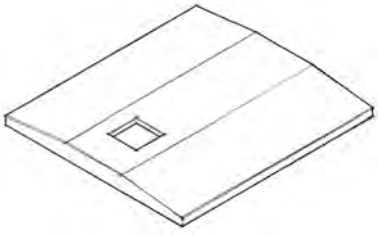

roof

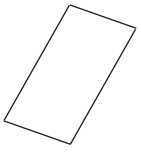

shims

Scan our QR code to watch our online instruction videos.

Section A - Pizza Oven Base

1. On your prepared level base, lay out the first layer of the pizza oven base as indicated in the diagram.

8 x 12	(14)
8 x 8	(4)
4 x 8	(6)

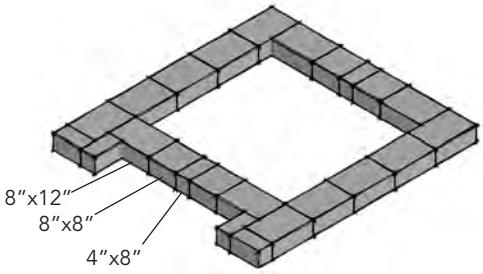

IMPORTANT: Periodic checks must be made to ensure that the layers remain level. If layers are not level, use the included shims to adjust as necessary.

2. Lay out the second layer of the base as indicated in the diagram.

8 x 12	(18)
4 x 8	(2)

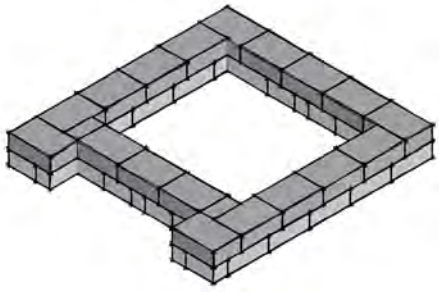

3. Lay out the 2” divider plates as indicated in the diagram. The chiseled edges should face the front and back of the Pizza Oven with the <u>same overhang</u>. Ensure the divider plates are level and glue them to the quarry stone below using the landscape glue provided.

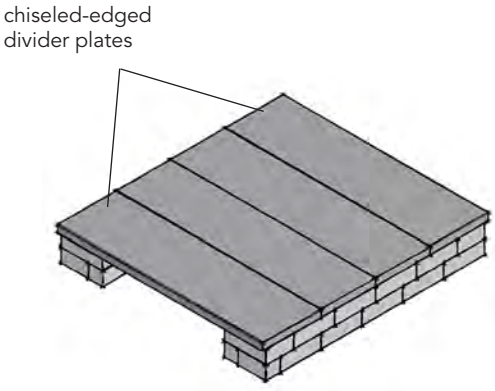

barkman™

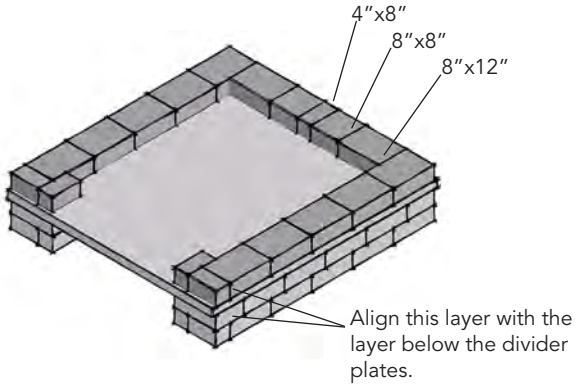

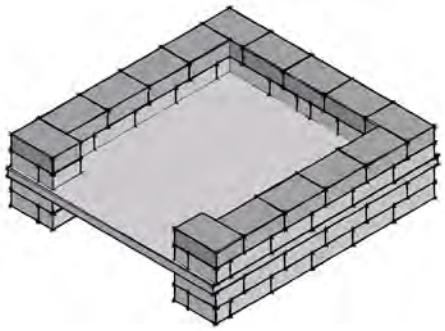

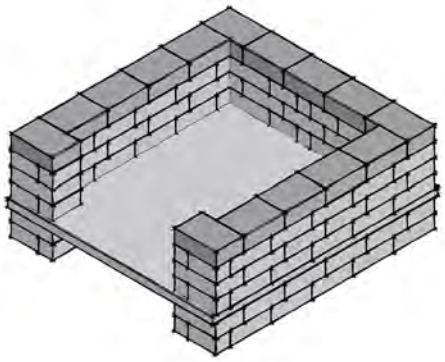

Section B - Wood Box Surround, Mantle, Oven Dome

1. Lay out the first layer of the wood box surround as indicated in the diagram. Glue this layer to the divider plates below using the landscape glue provided.

8 x 12	(12)
8 x 8	(2)
4 x 8	(5)

IMPORTANT: Check periodically to be sure the opening remains a consistent 36”. Periodic checks must be made to ensure that the layers remain level. If layers are not level, use the included shims to adjust as necessary.

2. Lay out the second layer of the wood box surround as indicated in the diagram.

8 x 12	(15)

3. Repeat the patterns from steps 1&2 of the wood box surround once to make up the four layers in total of the wood box surround.

8 x 12	(12)
8 x 8	(2)
4 x 8	(5)

4. Lay out the fifth layer of the wood box surround as indicated in the diagram.

8 x 12	(12)
8 x 8	(2)
4 x 8	(3)

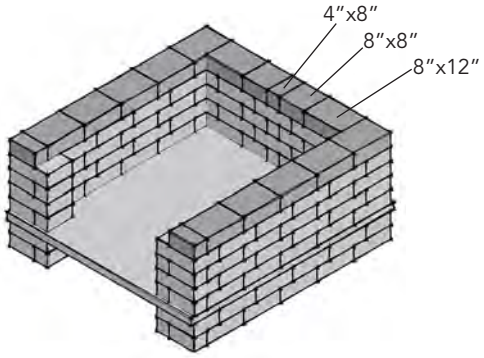

5. Place the large arch into layer five as indicated in the diagram. Glue the arch down where it contacts the quarry stone below using the landscape glue provided.

IMPORTANT: Be sure to hold the arch in place until the next layer of quarry stone is set atop of it.

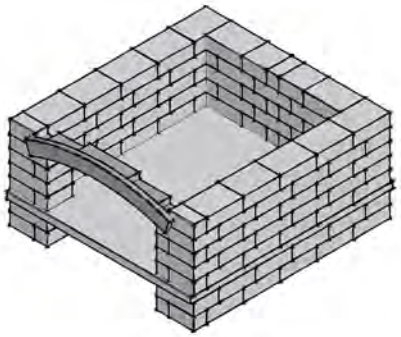

6. Lay out the sixth layer of the wood box surround as indicated in the diagram.

8 x 12	(13)
8 x 8	(2)
6 x 4 7/8	(2)
8 x 2 5/8	(2)
8 x 3 3/4	(2)

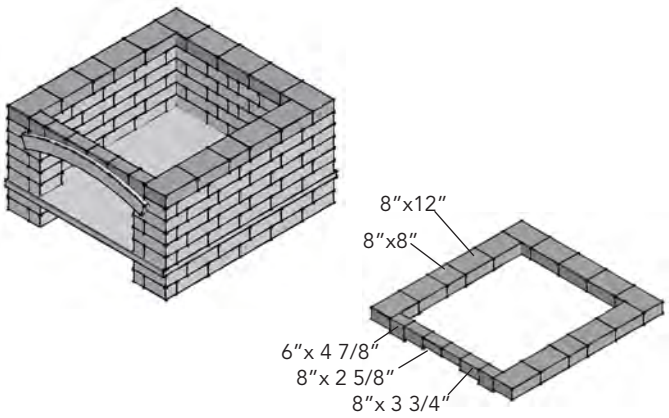

barkman™

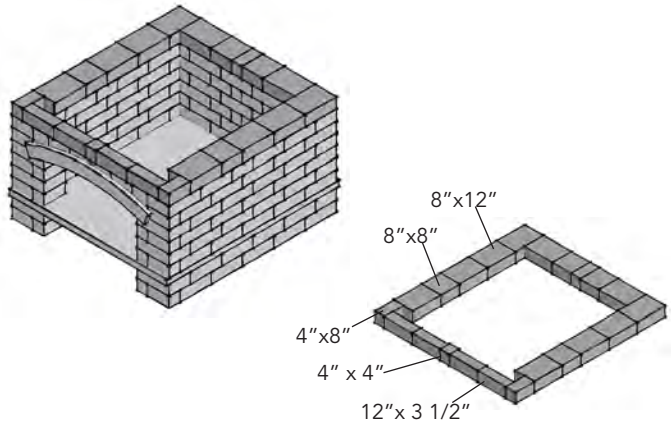

7. Lay out the seventh layer of the wood box surround as indicated in the diagram. Glue this layer down using the landscape glue provided.

8 x 12	(10)
8 x 8	(4)
4 x 8	(3)
4 x 4	(1)
12 x 3 1/2	(4)

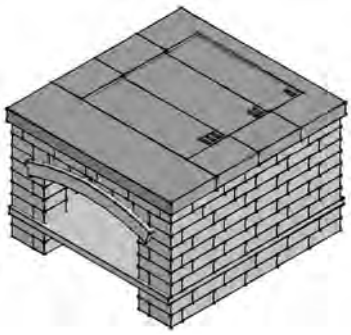

8. Lay out the four mantle pieces as indicated in the diagram. The mantle should have the same overhang on all sides. Ensure that the pieces are level. Adjust as necessary using the included shims.

IMPORTANT: The mantle pieces have sequential markings from 1 to 4 on the left-hand side. Work sequentially from back to front starting with the piece having 1 marking at the back.

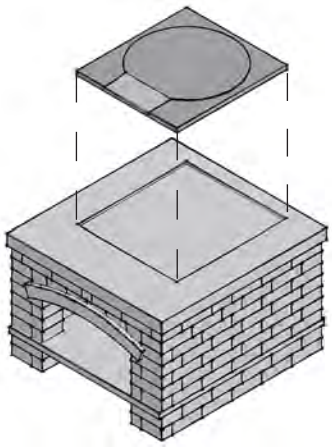

9. Place the oven floor into the countertop inset as indicated in the diagram.

10. Place the oven dome onto the oven floor as indicated in the diagram. Seal the outer edges with the **SILICONE** provided.

WARNING: ONLY USE **SILICONE** TO SEAL THE OUTER EDGES OF THE OVEN DOME.

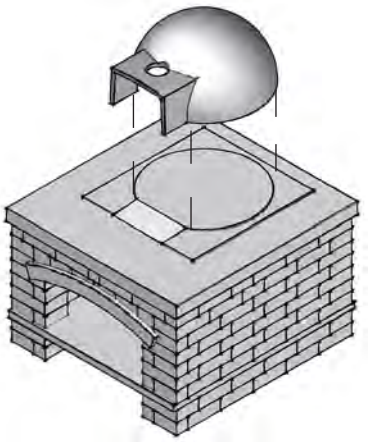

Section C - Upper Wall Surround, Roof, and Chimney

1. Lay out the first layer of the upper wall surround as indicated in the diagram. Glue this layer down to the countertop using the landscape glue provided.

8 x 12	(4)
4 x 8	(13)

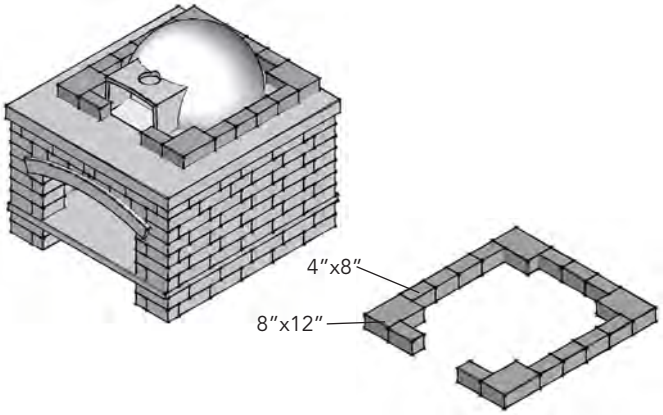

IMPORTANT: Periodic checks must be made to ensure that the layers remain level. If layers are not level, use the included shims to adjust as necessary.

2. Lay out the second layer of the upper wall surround as indicated in the diagram. Glue this layer down using the landscape glue provided.

8 x 12	(4)
4 x 8	(12)
4 x 4	(2)

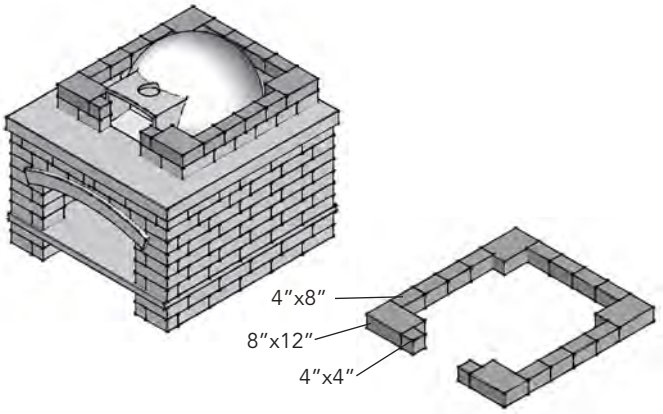

barkman™

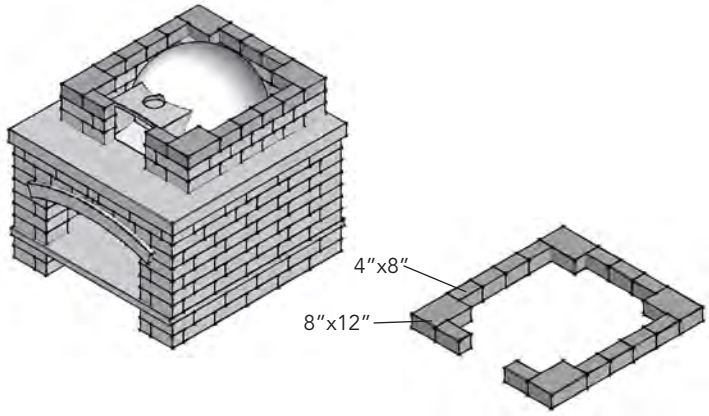

3. Lay out the third layer of the upper wall surround as indicated in the diagram.

8 x 12	(4)
4 x 8	(13)

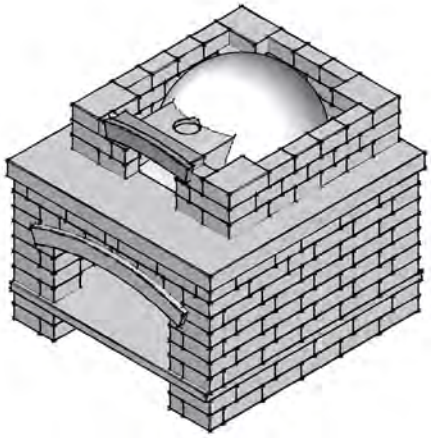

4. Place the arch into the third layer as indicated in the diagram. Glue the arch down where it contacts the quarry stone below using the landscape glue provided.

IMPORTANT: Be sure to hold the arch in place until the next layer of quarry stone is set atop of it.

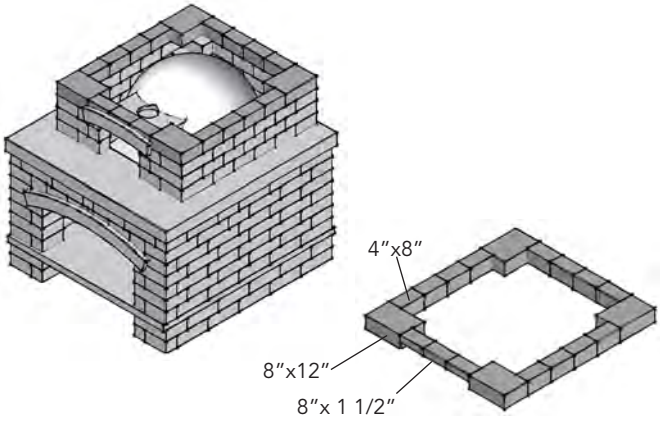

5. Lay out the fourth layer of the upper wall surround as indicated in the diagram.

8 x 12	(4)
4 x 8	(12)
8 x 1 1/2	(3)

6. Lay out the fifth layer of the upper wall surround as indicated in the diagram. Ensure this layer is level for holding the roof. Glue this layer down using the landscape glue provided.

8 x 12	(4)
4 x 8	(15)

IMPORTANT: Allow glue to set for at least **2 hours** before installing the roof.

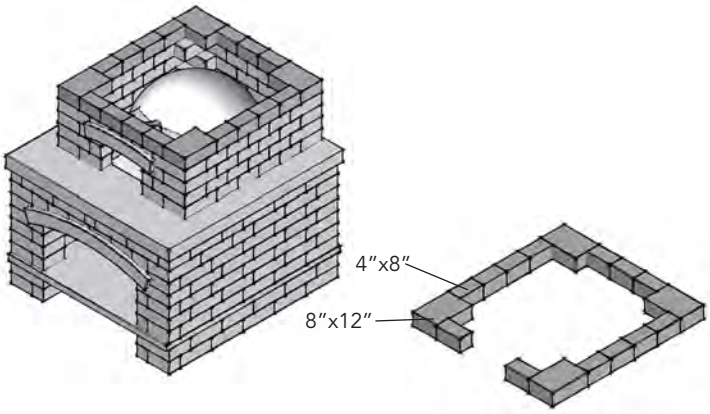

Check to ensure the glue has begun to set so that the roof does not move any blocks underneath. Blocks should be steady when moved.

7. Place the roof on the fifth layer as indicated in the diagram. Ensure that the opening for the chimney is towards the front of the pizza oven and is aligned with the opening in the pizza oven dome. Use the included shims to level if necessary.

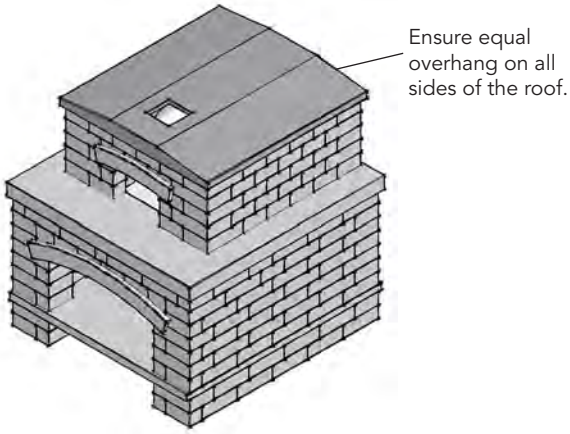

IMPORTANT: The roof is 220 lbs. and is heavy to lift. One recommended install technique is to use wood 2"x4" studs to lift spanning the roof widthwise. Lower the roof down with the 2"x4" studs, align the roof, and move the wood studs out 1 at a time.

8. Lay out the first layer of the chimney as indicated in the diagram. Glue this layer down to the roof using the landscape glue provided.

4 x 8	(6)

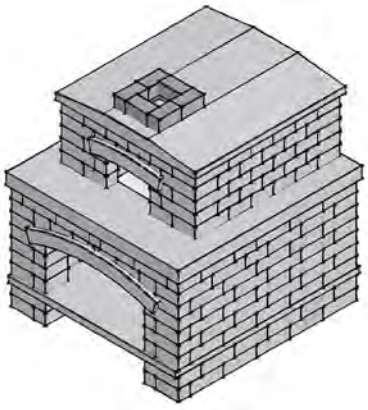

barkman™

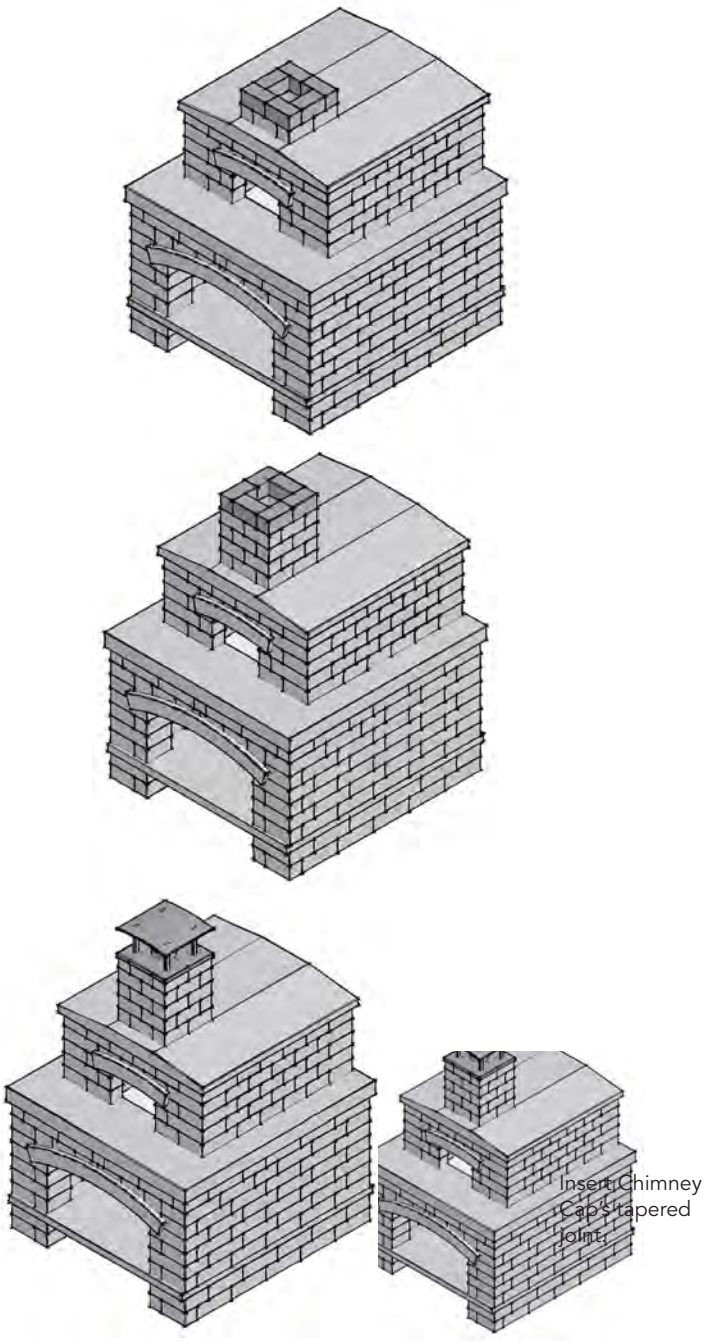

9. Lay out the second layer of the chimney as indicated in the diagram. Glue this layer down using the landscape glue provided.

   4 x 8 (6)

10. Repeat the patterns from steps 8&9 of Section C to a height of 5 layers above the roof, checking that the layers remain level. Glue the 5th layer down using the landscape glue provided.

11. Attach the two-piece chimney pipe together and install it, ensuring that a proper connection is made with the pizza oven dome. Use the included **SILICONE** along the top edge of the quarry stone to secure the chimney.

WARNING: ONLY USE **SILICONE** IN SECURING THE CHIMNEY AND EXTENSION PIPE.

STOP

Allow 72 hours for glue and silicone to set before first use.

AFTER INSTALLATION:

CURING INSTRUCTIONS:

Upon installation of your new pizza oven, there are still small amounts of moisture needing to work their way out of the oven dome and floor. If you immediately begin to build large fires in your pizza oven, you will compromise your oven's longevity and ability to cook well and can ultimately cause damage, including cracking. It is then important to build fires slowly to cure the oven in preparation for use.

The first day of firing, the dome temperature should stay close to 100˚C without exceeding it. A suggested way to do so is by building a fire in a separate location, and placing the hot coals into the oven floor. Gradually build up from this point to larger and larger fires for 4-5 days.

Due to thermal expansion, surface cracks may appear in the oven dome or floor. This is normal, and will not affect the quality of your pizza oven.

OPERATING INSTRUCTIONS:

After curing your pizza oven and you're ready to start cooking, light a small fire and slowly build it up. The insides of the oven dome will initially turn black from the fire smoke. When the inner walls turn from black to a whitish grey, then you know that this is the perfect temperature to cook your food.

Your pizza oven is designed to be used with natural, dry wood products only. DO NOT USE CHARCOAL, PRESSURE TREATED LUMBER, CHIPPED WOOD PRODUCTS, SAPPY WOOD (SUCH AS PINE), LAMINATED WOOD, OR ANY MATERIAL OTHER THAN DRY MEDIUM OR HARD NATURAL FIREWOOD. Using wood that is not dry will cause the oven to emit a considerable amount of smoke and could also cause permanent damage.

WARNING: DO NOT ADD ANY ACCELERANTS OR OTHER NON-WOOD PRODUCTS FOR FIRING, AS THIS CAN COMPROMISE THE INTEGRITY OF THE OVEN DOME AND FLOOR, LEADING TO RISK OF PRODUCT FAILURE AND PERSONAL INJURY.

DO NOT USE LIQUID FUEL (firelighter fluid, gasoline, kerosene or similar liquids) TO START OR MAINTAIN A FIRE. Do not use water to lower the temperature or extinguish fire in a hot pizza oven.

Fire must be built directly on the pizza oven floor. DO NOT ELEVATE THE FIRE.

DO NOT BUILD THE FIRE WHERE FLAMES EXIT THE OVEN OPENING.

During your first and second use of the pizza oven, start by cooking something simple, such as a pizza dough, then dispose of it without eating it after it's cooked. You can then begin to enjoy what you have cooked in the oven during your third try.

Always pre-warm any cooking accessory before you put it in the oven. Placing cold accessories on the oven floor can cause cracking due to thermal shock.

MAINTENANCE INSTRUCTIONS:

Make sure that the oven is completely cool before inspecting and cleaning it.

Cleaning the Oven:

1. DO NOT use water to clean, dampen or extinguish fire in a hot pizza oven.

2. Never use any cleaner (detergent, chemicals, soaps) on the pizza oven.

3. Using a copper brush, rake the ash into the centre of the oven floor, being careful with exposed red embers. DO NOT use steel wire brushes, natural fiber brushes or wet clothes to clean the oven floor.

4. Remove the ash using a metal shovel and place the ashes in a metal container with a tightly-fitting lid. This container should be stored on a non-combustible surface, away from fire hazards. When the ashes are disposed by burial in soil or otherwise locally dispersed, they should remain in the closed metal container until all particles have completely cooled.

Cleaning the Chimney:

If you have doubts on your ability to clean the chimney, have it cleaned by a professional. If you were to clean it yourself, make sure to use a brush to clean the inside and outside of the extension pipe. Do not use a brush that will scratch the stainless steel liner of your chimney.